Laserglow Product Datasheet

LID-1450 Enhanced Beam Profile Diode Laser System

Laserglow Part Number: IE50505FX

Similar Products:

For information about the other lasers in this product family visit:

http://www.laserglow.com/IE5

Ordering:

Order Online Now or Request Quote:

http://www.laserglow.com/IE50505FX

Series Specifications:

Nominal Wavelength	1450 nm
Output Type	CW
Laser Source Type	Diode

Overview:

The LID-1450 Series of Enhanced Profile Collimated Diode (Semiconductor) Lasers are ideal for applications requiring both a wavelength in the IR range and a good beam profile typically unavailable in a diode laser. This series is available in a range of output power levels of 50 mW to 150 mW with a high level of long-term output power stability and long operating lifetime at an aggressively competitive cost.

These lasers are commonly used for various scientific applications involving biological research as well as PIV, spectral analysis, and a broad spectrum of other applications. The driver is available as a complete FDA-compliant system or as an O.E.M. component with significantly reduced dimensions.

Available with TTL and analog modulation as well as a wide array of output power and stability levels, Laserglow products are currently being used by some of the World's top universities and other prominent research facilities.

Key Features:

- Round, homogeneous, flat-top transverse beam profile
- Air cooled - no need for water cooling or external chiller
- Lightweight, compact design
- Efficient Diode Laser technology runs on standard AC power (85 - 264 V, 47 - 63 Hz)
- >10,000 hours continuous maintenance-free operating life
- FDA CDRH Compliant Class IIIb / Class IV enclosure
- 48-hour replacement coverage available for an additional fee on specific models

Package Includes:

- Laser Head
- Driver/Power Supply
- Power Cable

- BNC Connector (LabSpec models only)
- Keys, Safety Interlock
- Hard-shell Carrying Case

Specifications:

This spec sheet has been generated specifically for part number IE50505FX, per your request, and data for the entire series is also displayed for your reference. The specs which are specific to IE50505FX have been highlighted below in **red + bold**.

Output Power (mW)	**>50**, >100, >150
Output Power Stability (%RMS/4h)	<1, <3, **<5**, <10
Central Wavelength (nm)	**1450**
Wavelength Tolerance (+/- nm)	**10**
Divergence (mrad, full angle)	**<8**
Beam Dimensions (mm, 1/e²)	**2**
Warm-up Time (minutes)	**5**
Optical Noise Amplitude (%RMS @ 20 Hz - 20 MHz)	**<20**
Beam Pointing Stability (mrad)	**<0.05**
Operating Temperature Range (°C)	**10 to 35**
Max. Analog Modulation Freq. (Hz)	**30000**
Max. TTL Modulation Freq. (Hz)	10000, **30000**
Modulation Input Signal	**0-5 VDC**
Max. Power Input Duty Cycle	**100%**
Standard Warranty (months)	**12**
MTTF (operational hours)	**10000**
Weight of Product or Laser Head (kg)	**0.6**
Beam Height from Base Plate (mm)	**24.8**
Dimensions of Product or Laser Head (mm)	**140.7 (l) x 73 (w) x 46.2 (h)**

CW: All specifications are based on performance at full output power and after the specified warmup period. Output characteristics may change if the laser is run at a different power level.
Q-Switched: Specifications are based on the laser pulsing at the specified design frequency. Output characteristics may change if the laser is run at a different frequency.

Power Supply Options:

These lasers are available with several different power supply options. The model that you have selected is highlighted below, and any other options are shown for easy reference.

	Power Supply Type:	**FR**
FDA-Compliant LabSpec	Input Power	**85v to 264v**
	Power Supply Weight (kg)	**1.5**
	Dimensions (mm)	**154 (l) x 155 (w) x 95 (h)**

	Power Supply Type:	**SR**
FDA-Compliant Standard	Input Power	85v to 264v
	Power Supply Weight (kg)	1.2
	Dimensions (mm)	133 (l) x 130 (w) x 65 (h)

*Power supply may not be exactly as shown, see dimensional drawings on next 2 pages.

*Dimensions for fiber-integrated (I_) include laser head packaged inside.

Regulatory Classification:

The model you have selected (IE50505FX) requires the following safety label(s):

Dimensional Drawing - Laser Form Factor: R:

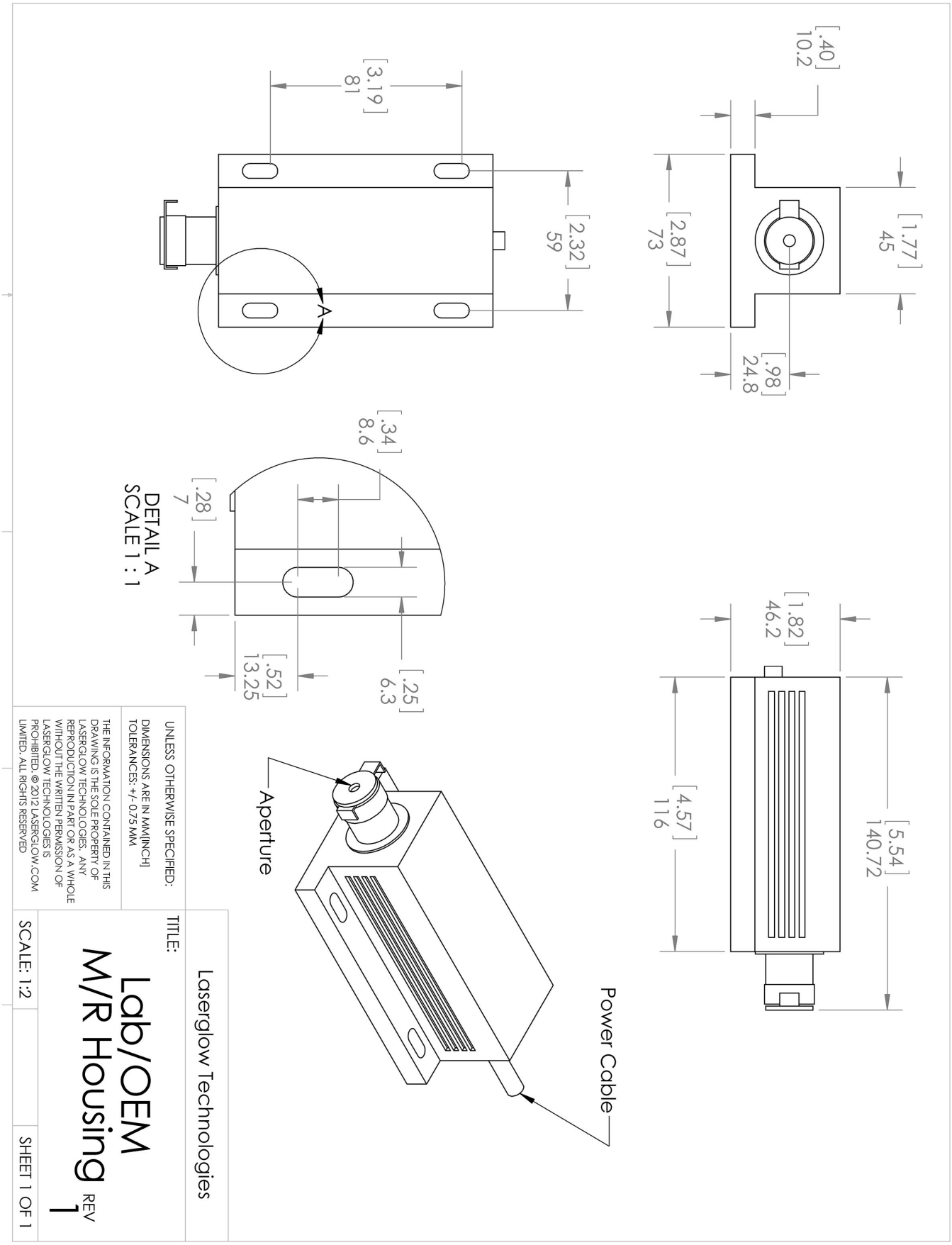

Dimensional Drawing - Power Supply Form Factor: FR:

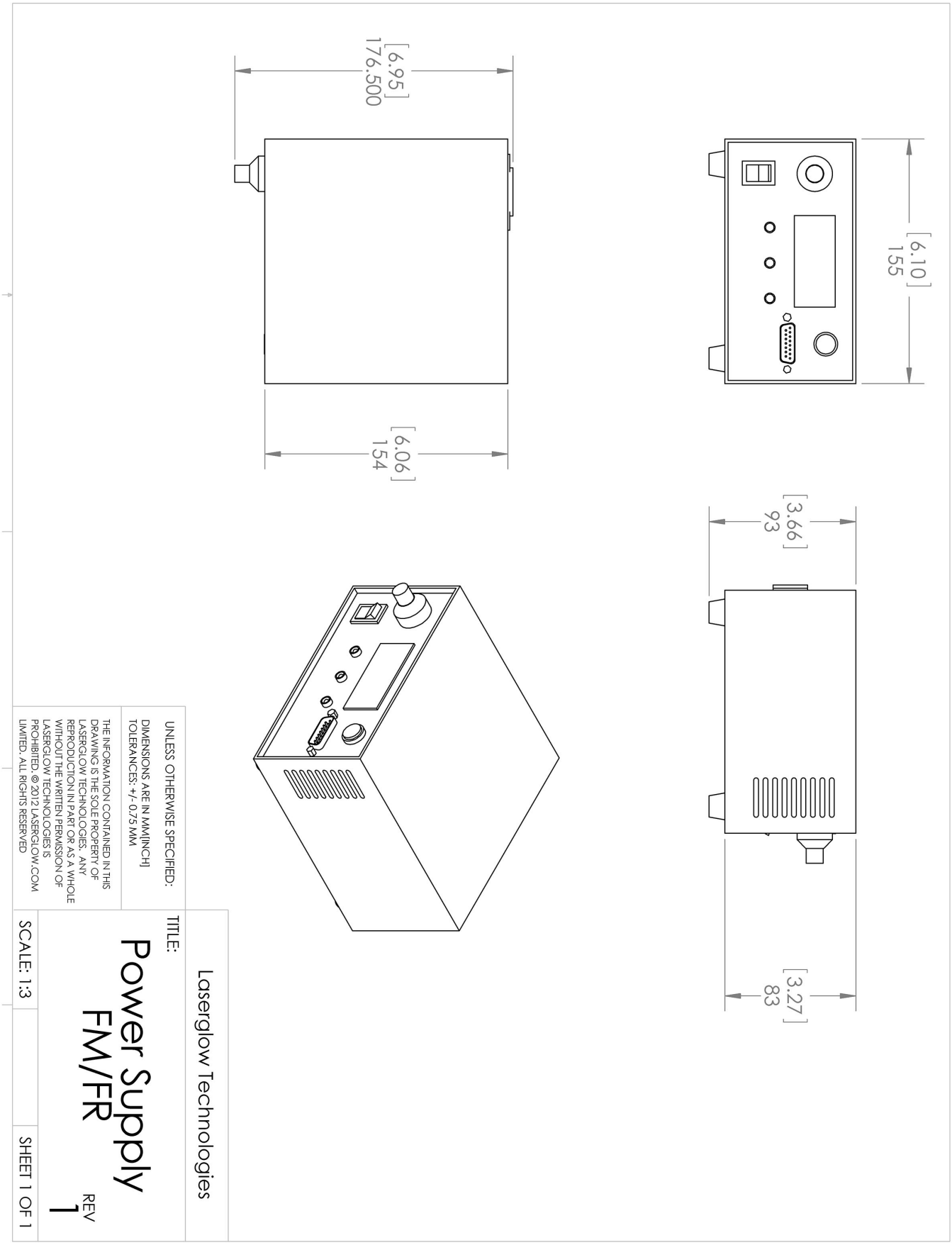

Accessories:

The most popular accessories for model IE50505FX are shown below. For additional details regarding these or other accessories please see our website or contact us directly.

Part Number	Description	
ACALBMXXX	Carrying Case-102 Holds Lab/OEM M, R and S size, standard or LabSpec laser Full Details: www.laserglow.com/ACA	Included With Laser
AGFMIR4XX	LSG-MIR-NF-4 Fit-Over Safety Goggles Mid-IR Range Output: OD 4+ at 945-10600 nm CE Certified Full Details: www.laserglow.com/AGF	

FOR MORE INFORMATION PLEASE CONTACT:

LASERGLOW TECHNOLOGIES
99 Ingram Dr. Unit B, North York, ON, Canada M6M2L7
Tel. (416) 729-7976 Fax (716) 322-3510
sales@laserglow.com www.laserglow.com

E&OE: Data included in this sheet may be subject to change without notice.
Please confirm critical specifications with our staff prior to ordering.