Laserglow Product Datasheet

LLD-0785 Low-Noise Collimated Diode Laser System

Laserglow Part Number: J7820B3FX

Similar Products:

For information about the other lasers in this product family visit:

http://www.laserglow.com/J78

Ordering:

Order Online Now or Request Quote:

http://www.laserglow.com/J7820B3FX

Series Specifications:

Nominal Wavelength	785 nm
Output Type	CW
Laser Source Type	Diode

Overview:

The LLD-0785 Series of Low-Noise Collimated Diode Lasers are ideal for applications requiring less than 1% noise and output power levels from 300 mW to 2500 mW. These 785 nm lasers maintain a high level of long-term output power stability and long operating lifetime at an aggressively competitive cost.

These lasers are commonly used for fluorescence excitation, PIV, Raman Spectroscopy, and a broad spectrum of other applications. The driver is available as a complete FDA-compliant system or as an O.E.M. component with significantly reduced dimensions.

Laserglow products are currently being used by some of the World's top universities and other prominent research facilities.

Key Features:

- 1% optical noise (20 Hz-20 MHz)
- Air cooled - no need for water cooling or external chiller
- Lightweight, compact design
- Efficient DPSS technology runs on standard AC power (85 - 264 V, 47 - 63 Hz)
- >10,000 hours continuous maintenance-free operating life
- FDA CDRH Compliant Class IIIb / Class IV enclosure
- 48-hour replacement coverage available for an additional fee on specific models

Package Includes:

- Laser Head
- Driver/Power Supply
- Power Cable
- BNC Connector (LabSpec models only)

- Keys, Safety Interlock
- Hard-shell Carrying Case

Specifications:

This spec sheet has been generated specifically for part number J7820B3FX, per your request, and data for the entire series is also displayed for your reference. The specs which are specific to J7820B3FX have been highlighted below in **red + bold**.

Output Power (mW)	>50, >100	>300, >500, >1000, >1500, **>2000**, >2500
Output Power Stability (%RMS/4h)	<1, <3	<1, **<3**, <5
Central Wavelength (nm)	785	**785**
Wavelength Tolerance (+/- nm)	5	**5**
Divergence (mrad, full angle)	<1	**<3**
Beam Dimensions (mm, 1/e²)	4	5x8
Warm-up Time (minutes)	5	**5**
Optical Noise Amplitude (%RMS @ 20 Hz - 20 MHz)	<1	**<1**
M^2	<1.5	**<20**
Polarization Ratio	>50	**>50**
Beam Pointing Stability (mrad)	<0.05	**<0.05**
Operating Temperature Range (°C)	10 to 35	**10 to 35**
Max. Analog Modulation Freq. (Hz)	30000	**30000**
Max. TTL Modulation Freq. (Hz)	30000	**30000**
Modulation Input Signal	0-5 VDC	**0-5 VDC**
Total Power Consumption (W)	16	
Max. Power Input Duty Cycle	100%	**100%**
Standard Warranty (months)	12	**12**
MTTF (operational hours)	10000	**10000**
Weight of Product or Laser Head (kg)	0.6	**0.6**
Beam Height from Base Plate (mm)	24.8	**24.8**
Dimensions of Product or Laser Head (mm)	140.7 (l) x 73 (w) x 46.2 (h)	**140.7 (l) x 73 (w) x 46.2 (h)**

CW: All specifications are based on performance at full output power and after the specified warmup period. Output characteristics may change if the laser is run at a different power level.
Q-Switched: Specifications are based on the laser pulsing at the specified design frequency. Output characteristics may change if the laser is run at a different frequency.

Power Supply Options:

These lasers are available with several different power supply options. The model that you have selected is highlighted below, and any other options are shown for easy reference.

	Power Supply Type:	**FR**
FDA-Compliant LabSpec	Input Power	**85v to 264v**
	Power Supply Weight (kg)	**1.5**
	Dimensions (mm)	**154 (l) x 155 (w) x 95 (h)**

*Power supply may not be exactly as shown, see dimensional drawings on next 2 pages.

*Dimensions for fiber-integrated (I_) include laser head packaged inside.

Regulatory Classification:

The model you have selected (J7820B3FX) requires the following safety label(s):

Dimensional Drawing - Laser Form Factor: R:

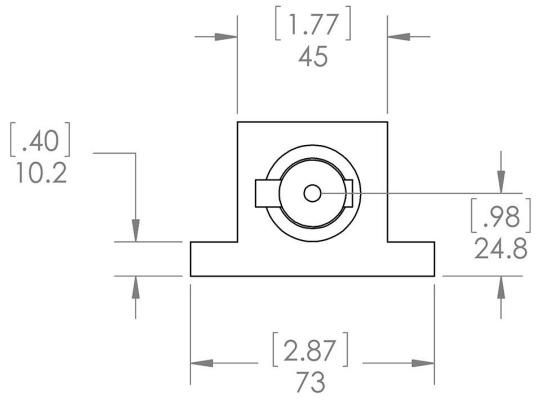

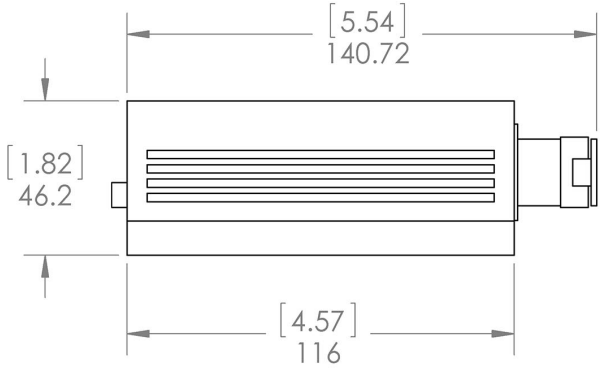

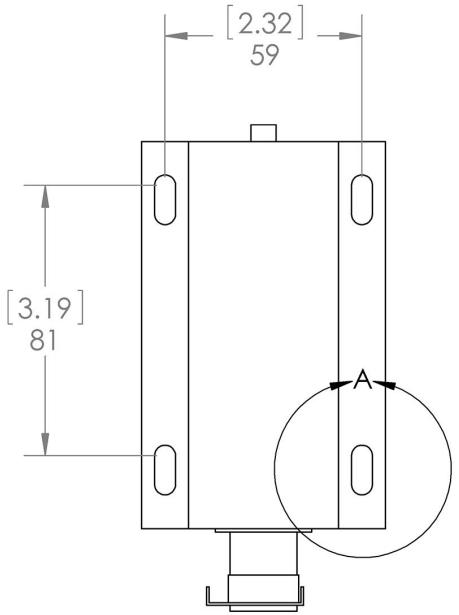

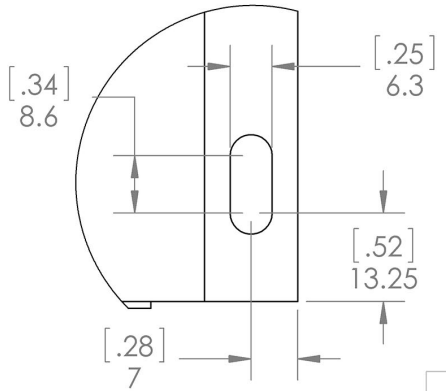

DETAIL A
SCALE 1 : 1

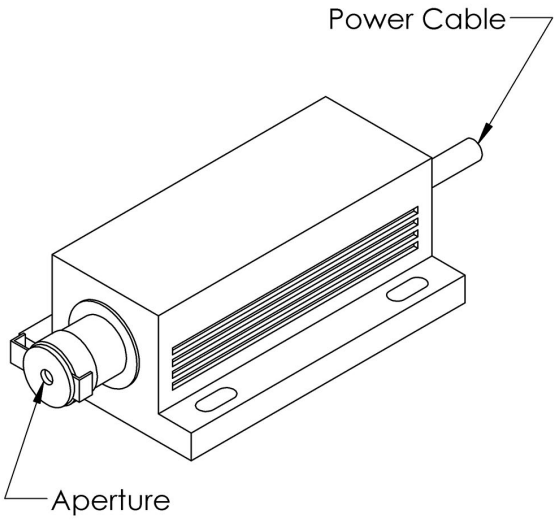

Laserglow Technologies

UNLESS OTHERWISE SPECIFIED:

DIMENSIONS ARE IN MM[INCH]
TOLERANCES: +/- 0.75 MM

THE INFORMATION CONTAINED IN THIS DRAWING IS THE SOLE PROPERTY OF LASERGLOW TECHNOLOGIES. ANY REPRODUCTION IN PART OR AS A WHOLE WITHOUT THE WRITTEN PERMISSION OF LASERGLOW TECHNOLOGIES IS PROHIBITED. © 2012 LASERGLOW.COM LIMITED. ALL RIGHTS RESERVED

TITLE:

Lab/OEM M/R Housing

REV 1

SCALE: 1:2

SHEET 1 OF 1

Dimensional Drawing - Power Supply Form Factor: FR:

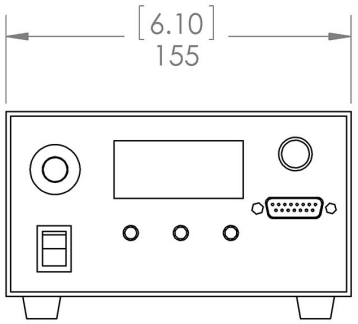

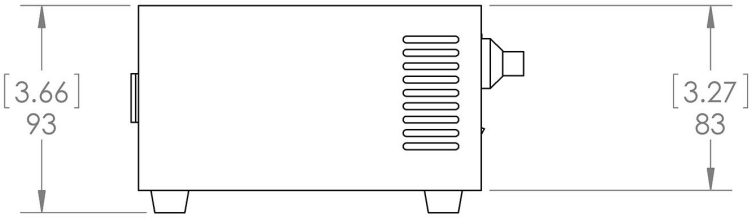

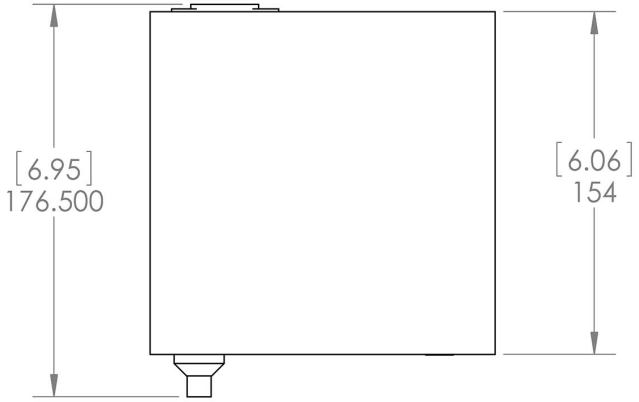

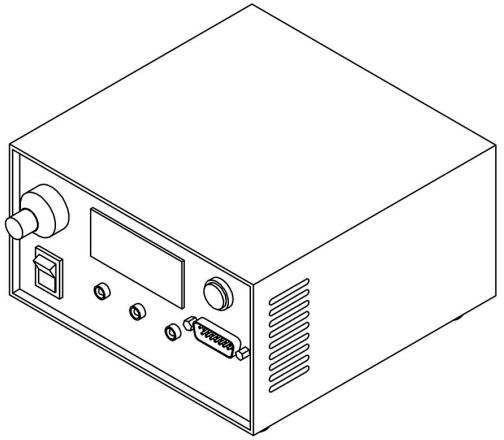

Laserglow Technologies

UNLESS OTHERWISE SPECIFIED:

DIMENSIONS ARE IN MM[INCH]
TOLERANCES: +/- 0.75 MM

THE INFORMATION CONTAINED IN THIS DRAWING IS THE SOLE PROPERTY OF LASERGLOW TECHNOLOGIES. ANY REPRODUCTION IN PART OR AS A WHOLE WITHOUT THE WRITTEN PERMISSION OF LASERGLOW TECHNOLOGIES IS PROHIBITED. © 2012 LASERGLOW.COM LIMITED. ALL RIGHTS RESERVED

TITLE:

Power Supply FM/FR

REV 1

SCALE: 1:3

SHEET 1 OF 1

Accessories:

The most popular accessories for model J7820B3FX are shown below. For additional details regarding these or other accessories please see our website or contact us directly.

Part Number	Description	
AGFKTP59X	LSG-KTP-NF-6 Fit-Over Safety Goggles 532/808/1064nm Output: OD 6+ at 190-534/740-1064 nm CE Certified Full Details: www.laserglow.com/AGF	
AFF2002XX	Armored Fiber With FC/PC Connectors 200um Core Multimode 2m length Full Details: www.laserglow.com/AFF	
AFS2002XX	Armored Fiber With SMA 905 Connectors 200um Core Multimode 2 m length Full Details: www.laserglow.com/AFS	
ACFNIRHXA	FC/PC Fiber Coupler/Collimator for IR wavelengths (700 to 1000 nm) (installed and aligned) 11mm diameter input lens Full Details: www.laserglow.com/ACF	
ACSNIRHXA	SMA-905 Fiber Coupler/Collimator for IR wavelengths (700 to 1000nm) (installed and aligned) 11mm diameter input lens Full Details: www.laserglow.com/ACS	
ACALBMXXX	Carrying Case-102 Holds Lab/OEM M, R and S size, standard or LabSpec laser Full Details: www.laserglow.com/ACA	Included With Laser

FOR MORE INFORMATION PLEASE CONTACT:

LASERGLOW TECHNOLOGIES
99 Ingram Dr. Unit B, North York, ON, Canada M6M2L7
Tel. (416) 729-7976 Fax (716) 322-3510
sales@laserglow.com www.laserglow.com

E&OE: Data included in this sheet may be subject to change without notice.
Please confirm critical specifications with our staff prior to ordering.