Laserglow Product Datasheet

LRS-0561 DPSS Laser System

Series Specifications:

Nominal Wavelength	561 nm
Output Type	CW
Laser Source Type	DPSS

Overview:

The LRS-0561 Series of Diode-Pumped Solid-State (DPSS) Lasers are ideal for applications requiring 561 nm laser light at power levels from 5 mW to over 2000 mW at output power stability of better than 10% RMS over 4 hours. (5% available on certain models.) This series has a long operating lifetime at an aggressively competitive cost.

These lasers are commonly used for fluorescence excitation and other applications requiring a narrow linewidth and good long-term output power stability. The driver is available as a complete FDA-compliant system or as an O.E.M. component with significantly reduced dimensions.

Laserglow products are currently being used by some of the World's top universities and other prominent research facilities.

Key Features:

- Air cooled - no need for water cooling or external chiller
- Lightweight, compact design
- Efficient DPSS technology runs on standard AC power (85 - 264 V, 47 - 63 Hz)
- >10,000 hours continuous maintenance-free operating life
- TTL and Analog modulation (input via BNC connector) *lab-spec models only*
- Specially-tuned for clean modulation responses from 1-100 Hz *(on selected models)*
- Adjustable output power (via lockable dial) *lab-spec models only*
- LED display showing LD current, laser cavity temperature *lab-spec models only*
- FDA CDRH Compliant Class IIIb / Class IV enclosure
- 48-hour replacement coverage available for an additional fee on specific models

Package Includes:

- Laser Head
- Driver/Power Supply
- Power Cable
- BNC Connector (LabSpec models only)
- Keys, Safety Interlock
- Hard-shell Carrying Case

Specifications:

This spec sheet has been generated specifically for part number R56-O, per your request, and data for the entire series is also displayed for your reference. The specs which are specific to R56-O have been highlighted below in **red + bold**.

Output Power (mW)	**<5**, **>30**, **>50**, **>100**, **>150**, **>200**, **>300**	>100	>300, >500, >800, >1000	>1500, >2000
Output Power Stability (%RMS/4h)	**<1**, **<3**, **<5**	<3	<1, <3, <5	<3, <5
Central Wavelength (nm)	**561.08**		561.08	561.08
Wavelength Tolerance (+/- nm)	**1**		1	1
Divergence (mrad, full angle)	**<1.5**	<1.5	<1.5	<2
Beam Dimensions (mm, $1/e^2$)	**2**	2	4	4
Warm-up Time (minutes)	**10**		10	10
Spectral Linewidth (nm)	**<0.25**		<0.25	<0.25
M^2	**<1.2**	<1.2	<3	<3
Polarization Ratio	**>100**		>100	>100
Beam Pointing Stability (mrad)	**<0.05**			
Operating Temperature Range (°C)	**10 to 35**		20 to 30	10 to 35
Max. Analog Modulation Freq. (Hz)	**150**, **30000**	30000	30000	30000
Max. TTL Modulation Freq. (Hz)	**150**, **30000**	30000	30000	30000
Modulation Input Signal	**0-5 VDC**	0-5 VDC	0-5 VDC	0-5 VDC
Total Power Consumption (W)	**35**			
Max. Power Input Duty Cycle	**100%**	100%	100%	100%
Standard Warranty (months)	**12**	12	12	12
MTTF (operational hours)	**10000**	10000	10000	10000
Weight of Product or Laser Head (kg)	**2**	1	2.6	6.1
Beam Height from Base Plate (mm)	**27.4**	27.4	68.2	93.5
Dimensions of Product or Laser Head (mm)	**197 (l) x 70 (w) x 50 (h)**	142.5 (l) x 60 (w) x 50 (h)	240 (l) x 99 (w) x 94 (h)	346 (l) x 140 (w) x 125 (h)

CW: All specifications are based on performance at full output power and after the specified warmup period. Output characteristics may change if the laser is run at a different power level.
Q-Switched: Specifications are based on the laser pulsing at the specified design frequency. Output characteristics may change if the laser is run at a different frequency.

Power Supply Options:

These lasers are available with several different power supply options. The model that you have selected is highlighted below, and any other options are shown for easy reference.

	Power Supply Type:	**FO**	**FN**	**FW**
FDA-Compliant LabSpec	Input Power	**85v to 264v**	85v to 264v	85v to 264v
	Power Supply Weight (kg)	**2.6**	2.6	5.2
	Dimensions (mm)	**268 (l) x 145 (w) x 106 (h)**	268 (l) x 145 (w) x 106 (h)	307 (l) x 168 (w) x 123 (h)

*Power supply may not be exactly as shown, see dimensional drawings on next 2 pages.

*Dimensions for fiber-integrated (I_) include laser head packaged inside.

Regulatory Classification:

The model you have selected (R56-O) requires the following safety label(s):

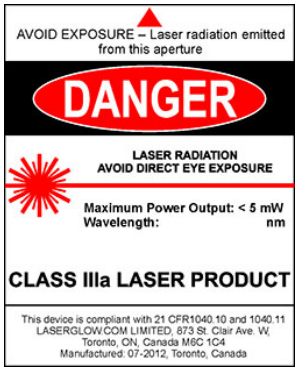

Dimensional Drawing - Laser Form Factor: O:

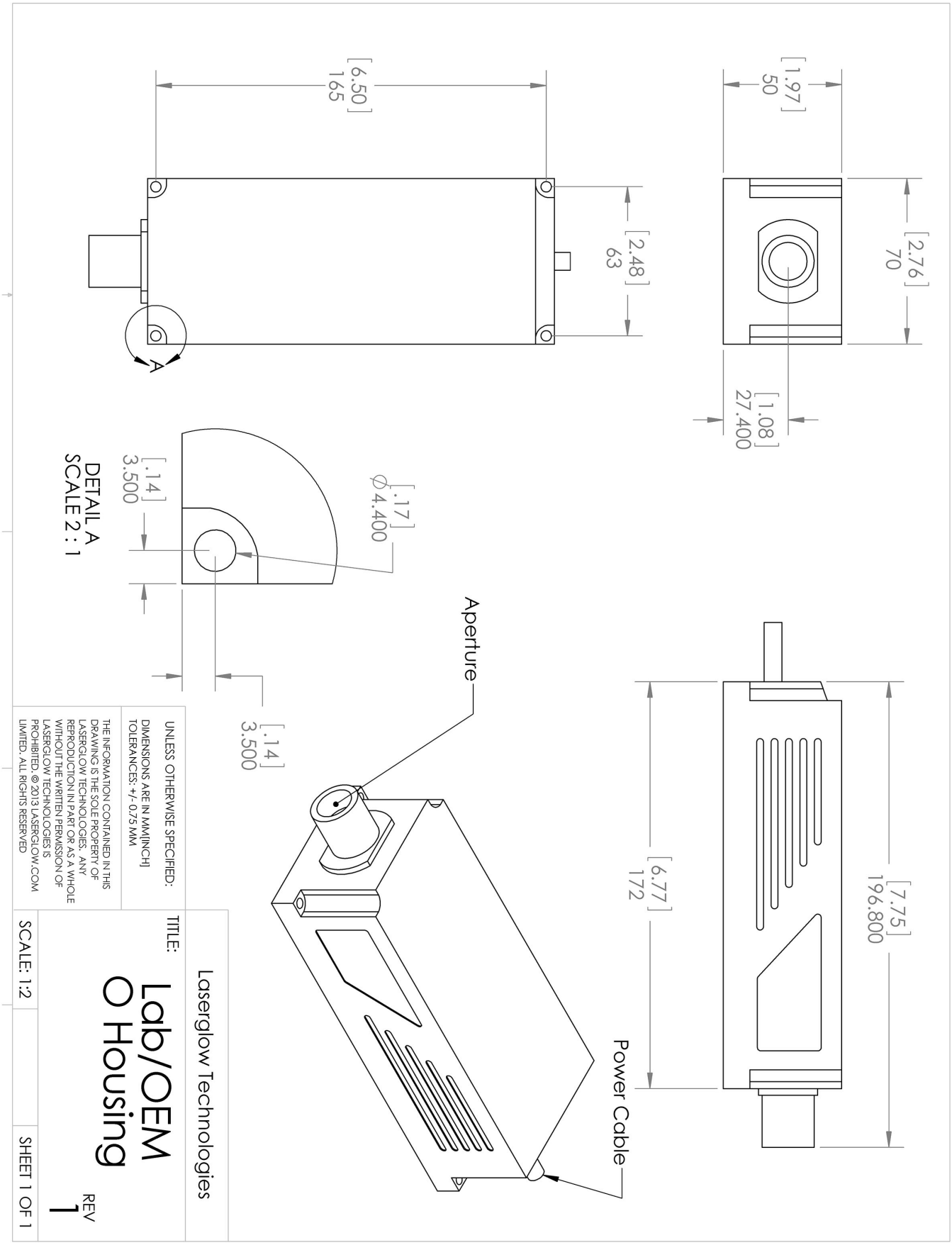

Dimensional Drawing - Power Supply Form Factor: FO:

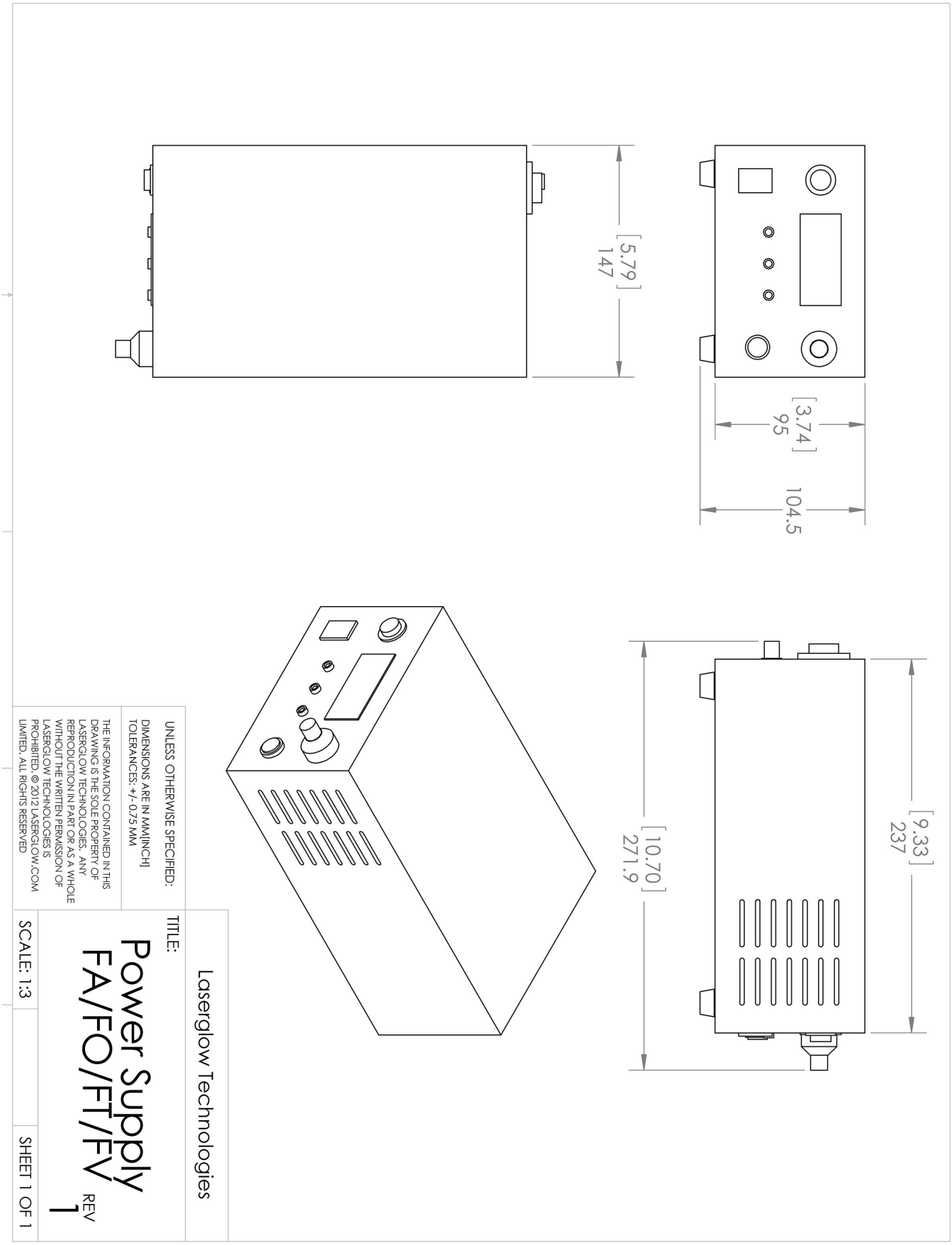

Accessories:

The most popular accessories for model R56-O are shown below. For additional details regarding these or other accessories please see our website or contact us directly.

Part Number	Description	
AFF2002XX	Armored Fiber With FC/PC Connectors 200um Core Multimode 2m length Full Details: www.laserglow.com/AFF	
AFS2002XX	Armored Fiber With SMA 905 Connectors 200um Core Multimode 2 m length Full Details: www.laserglow.com/AFS	
AGF5565XX	LSG-556-NF-5 Fit-Over Safety Goggles 556nm Output: OD 5+ at 190-579 nm CE Certified Full Details: www.laserglow.com/AGF	
ACFVISHXA	FC/PC Fiber Coupler/Collimator for visible spectrum wavelengths (400 to 700 nm) (installed and aligned) 11mm diameter input lens Full Details: www.laserglow.com/ACF	
ACSVISHXA	SMA-905 Fiber Coupler/Collimator for visible spectrum wavelengths (400 to 700 nm) (installed and aligned) 11mm diameter input lens Full Details: www.laserglow.com/ACS	
TBK	Complete optics kits with breadboard mounting hardware. External modulators, variable attenuators, free-space fiber launch systems Full Details: www.laserglow.com/TBK	
ACALBHFXX	Carrying Case-103 Holds Lab/OEM H, F and O size Standard/LabSpec laser Full Details: www.laserglow.com/ACA	Included With Laser

FOR MORE INFORMATION PLEASE CONTACT:

LASERGLOW TECHNOLOGIES
99 Ingram Dr. Unit B, North York, ON, Canada M6M2L7
Tel. (416) 729-7976 Fax (716) 322-3510
sales@laserglow.com www.laserglow.com

E&OE: Data included in this sheet may be subject to change without notice.
Please confirm critical specifications with our staff prior to ordering.